Planning sketch for your fuego equipment cart

fuego

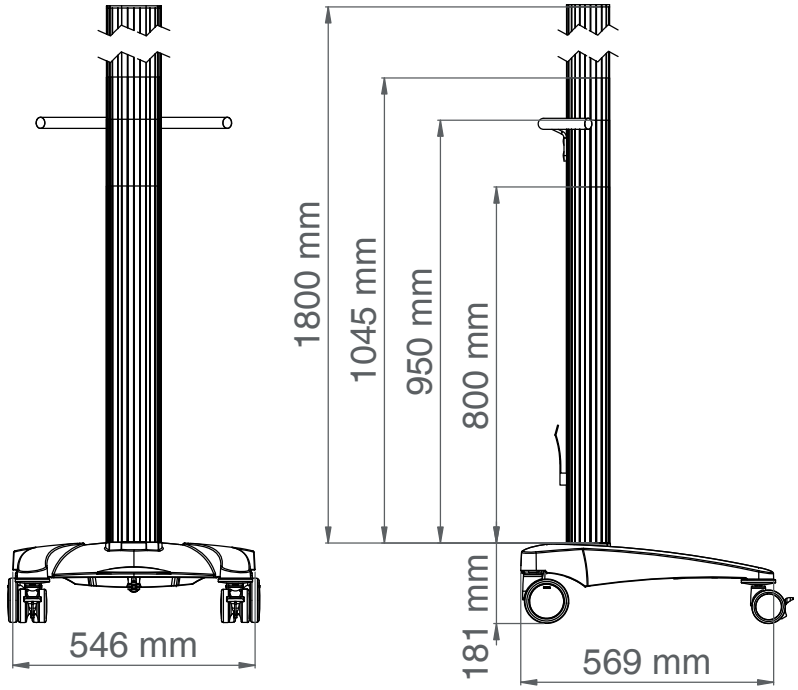

fuego lift cart

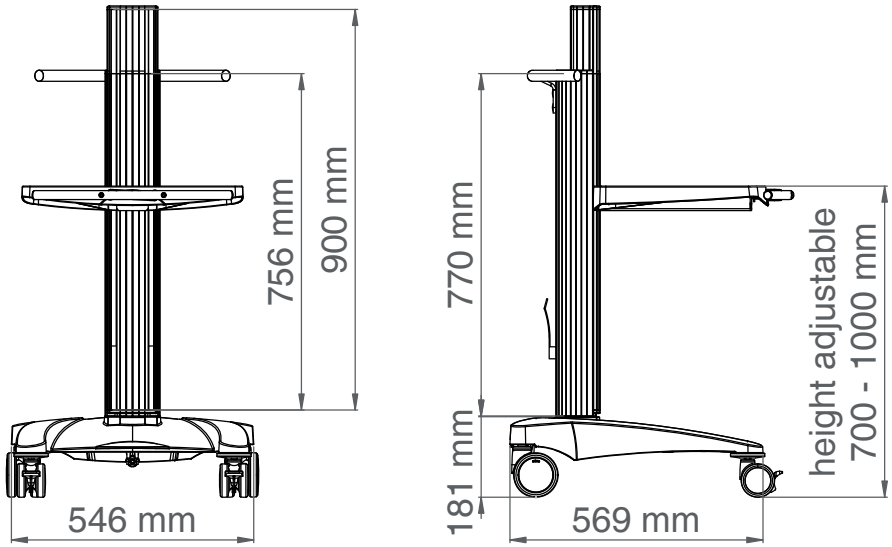

Different plates for lift carts

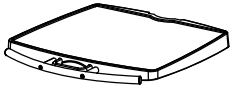

☐ tray (ABS) with front handle

☐ laptop plate with extensible mousepad and handle

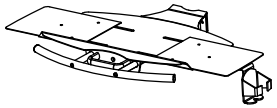

☐ keyboard plate with mouse extension and mouse holder incl. handle

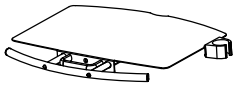

☐ special plate with holder incl. handle

Surcharge for 4 electrically conductive castors ☐

Carrier profile height for fuego:

800 mm	standard	☐
950 mm	standard	☐
1045 mm	standard	☐
1840 mm	variable	☐

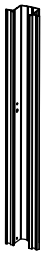

Carrier profile height for fuego lift cart:

770 mm standard ☐

Height of the slide profile device for fuego lift cart:

756 mm standard ☐

900 mm standard ☐

Load capacity of the lifting unit on the fuego lift cart:

up to 11 kg ☐

up to 15 kg ☐

Remarks: